A

AVIARY SYSTEMS
FLEX RAISE

LANDMECO

POULTRY SOLUTIONS EMPOWERED BY KNOWLEDGE

REARING

The system has been developed by LANDMECO in close cooperation with Danish producers based on many years' experience in manufacturing equipment for the poultry sector and in rearing chickens, respectively. There is no doubt that LANDMECOs rearing is a unique economical alternative to competing systems.

Considerable emphasis has been placed on functionality, chicken welfare and growth, user-friendliness, quality, ease of cleaning and, not least, price! The system is extremely simple and can easily be adapted to suit existing buildings. Many customers choose to install the system themselves and LANDMECO should be pleased to provide an experienced supervisor to ensure that installation is started correctly and optimally.

OPTIMUM CONDITIONS FROM START TO FINISH

1 PROTECTED ENVIRONMENT

The system is designed to offer the day-old chicks a protected environment on the lowest tier.

2 HEIGHT ADJUSTABLE

The system is equipped with height-adju- stable feeding and drinking system, giving the chicks optimum conditions throughout their growth. The height-adjustable feeding and drinking system is attached to the ti- ered system itself and there are therefore no special requirements on housing unit design. The system can be delivered with either manual or electrical hoist.

OPTIMUM CONDITIONS FROM START TO FINISH

3 UNIQUE VISIBILITY

The staggered tier arrangement allows an unobstructed view of the chicks during start-up and easy accessibility

4 VERSATILE SIDE SCREENS

As the chicks become more mobile the side screen can be lowered to provide a stairway to and from the floor.

Alternatively, side screens can be placed horizontally and thereby act as extra space.

5 UNIQUE ADVANTAGES DURING CAPTURE & CLEANING

When the birds are to be captured the feeding and drinking system is simply raised and the tiers folded up. The system has just a single vertical support, allowing a total width of only 496mm / 1,63ft when folded.

This ensures optimum conditions during capture and cleaning.

Superior quality
The materials used by LANDMECO are of very high quality. Only materials from acknowledged suppliers are used, thus ensuring long service life. The systems are always equipped with hot-dip galvanized base plate.

Lighting
LANDMECO offers 48 V LED light tubes with built-in reflector. Dimmers are also available.

TECHNICAL SPECIFICATIONS

Standard system

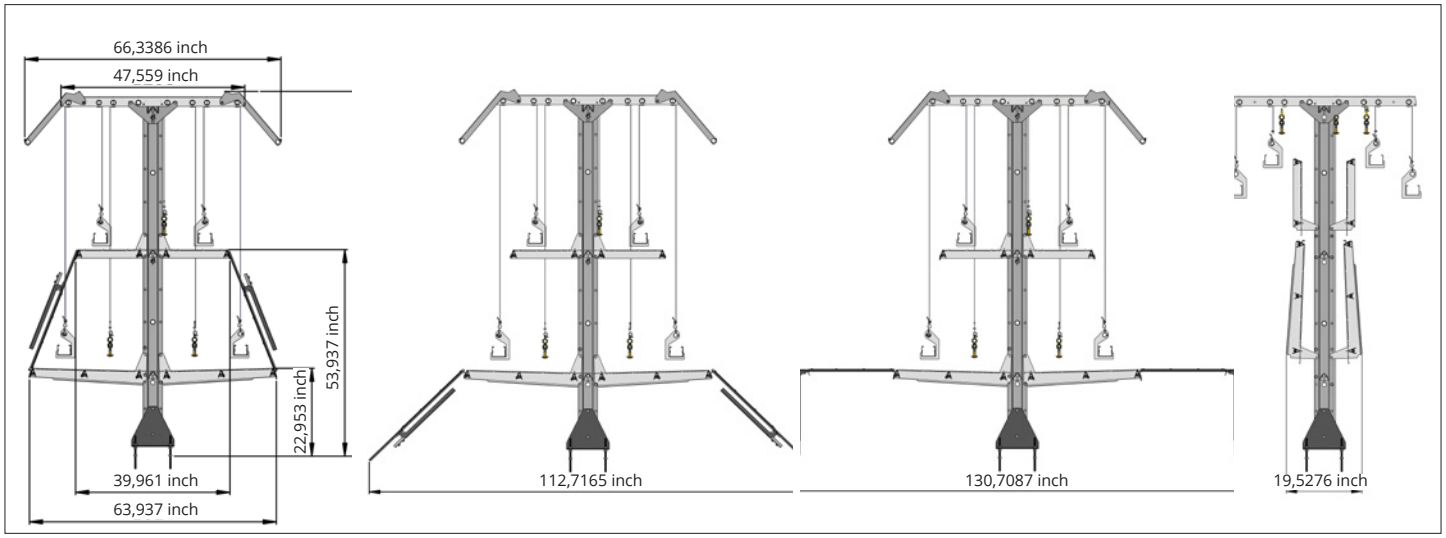

Extended system

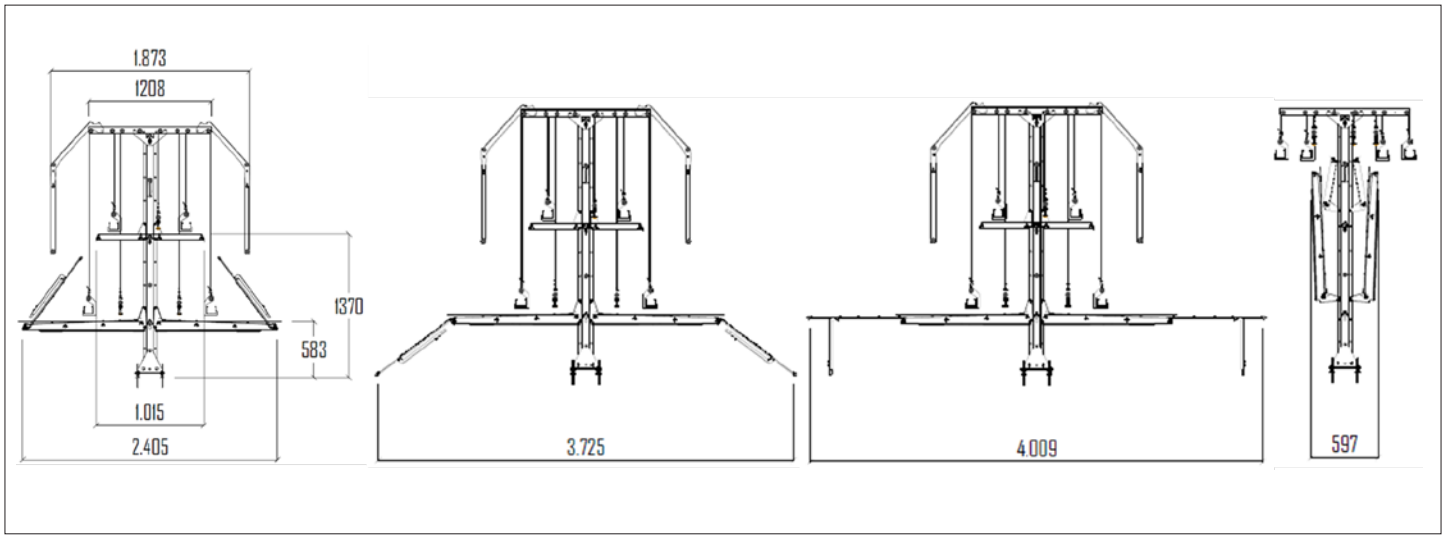

See also LANDMECO brochures on, for example:
(LANDMECO retains the right to alter specifications without notice)

DRINKING SYSTEMS

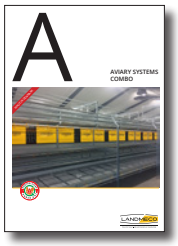

AVIARY SYSTEMS
COMBO

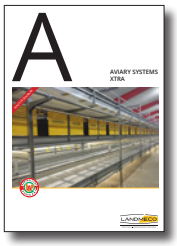

AVIARY SYSTEMS
XTRA

DEALER