DA 600 Chimney/Wall Exhaustion

Technical Info

TI • 2025-09-04

1 Product description

DA 600 components are used to for extracting air from livestock houses. DA 600 unit is aerodynamic and provides high air output with low energy consumption. DA 600 is made of a special polypropylene material, which withstands heavy high-pressure cleaning. The special polypropylene is smooth and anti-soiling and DA 600 is thus easy to clean. Polypropylene is environmentally sound, it is recyclable and no contaminants are generated in the manufacturing process.

The labyrinth sealing between the roof duct and the roofing sheet ensures a life-long impermeability of the unit without using silicone, rubber sealing or plastic cover.

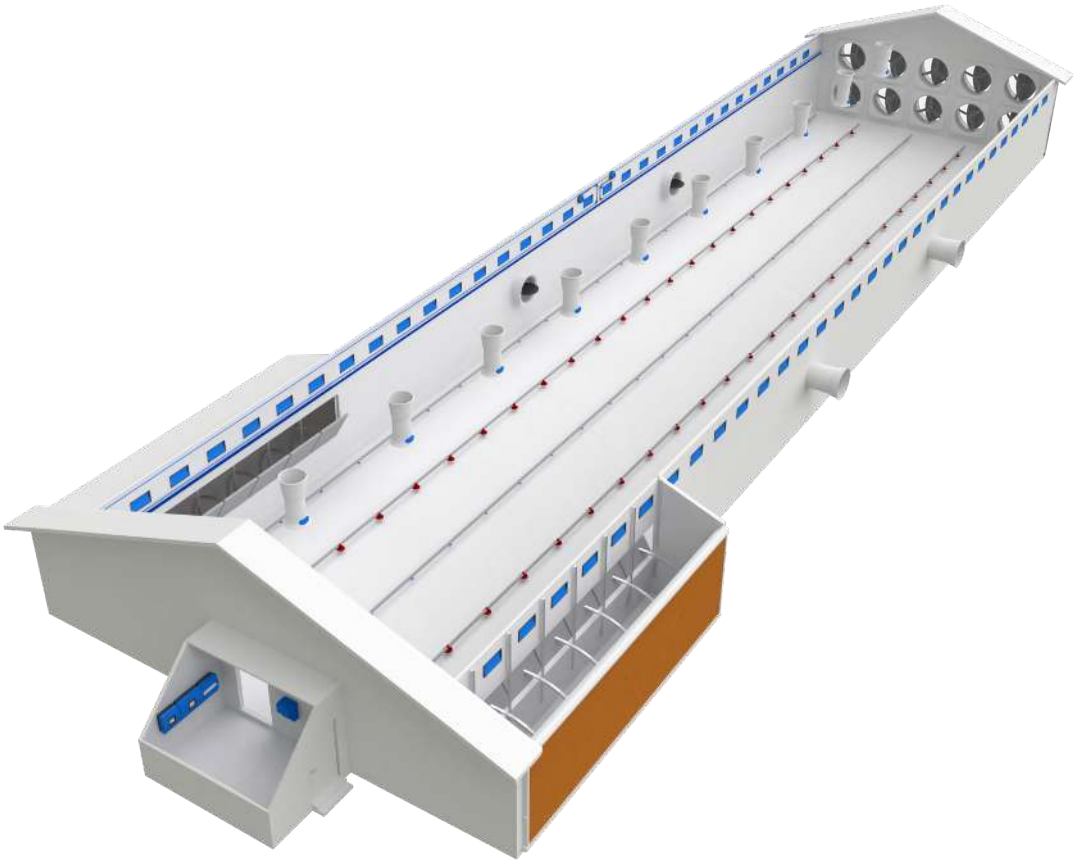

2 Product survey

2.1 Outline of chimney

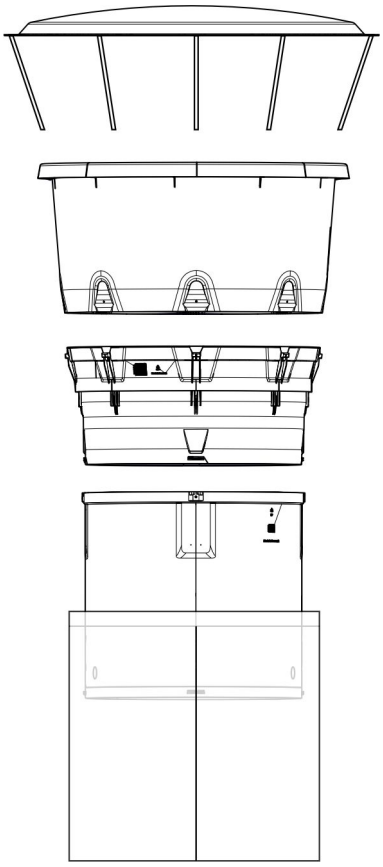

Above roof

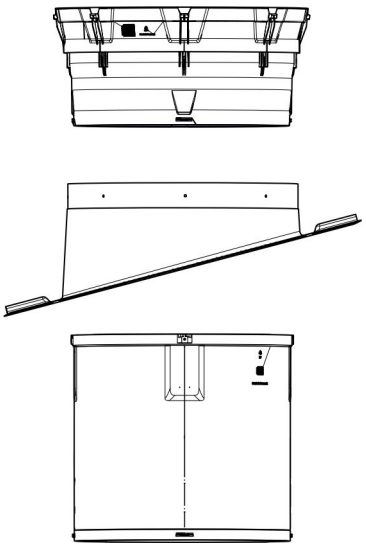

Lead-through

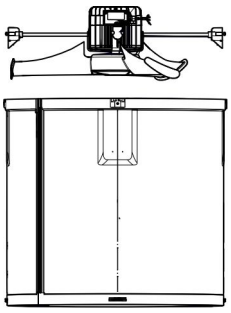

Attic/section

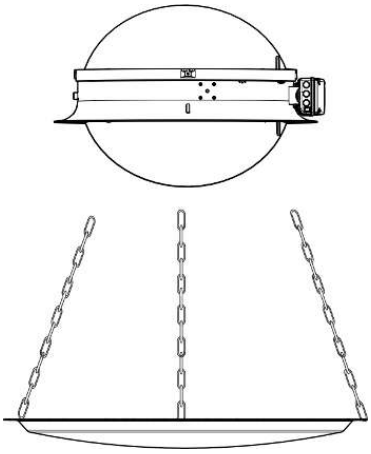

Inlet

2.1.1 Above roof

434063 DA 600 roof cap ø1100, gray

The roof cap reduces water penetration problems; note, however, that the chimney output will also be reduced. The roof cap can be mounted on the roof duct or the outlet cone.

Supplied with a mounting set.

434065 DA 600 roof cap ø1100 with net

Roof cap with net prevents birds from entering the house and reduces water ingress problems, but be aware that the performance of the chimney is also reduced. The roof cap with net is to be mounted on the outlet cone.

Supplied with a mounting set.

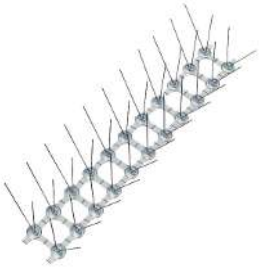

434084 DA 600 bird protection for outlet cone, set

Used to prevent birds making contact with the outlet cone.

Supplied with screws.

434451 DA 600 outlet cone gray

434452 DA 600 outlet cone black

Outlet cone which reduces water penetration problems and the pressure loss. This increases the output of the chimney.

Supplied with screws.

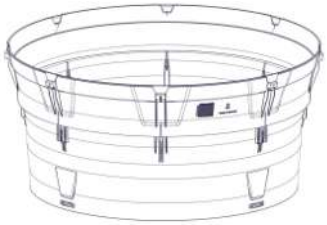

434431 DA 600 roof duct gray

434432 DA 600 roof duct black

Used for roof ducts in roof, outlet cone assembly, and for wall exhaust units.

Supplied with screws and mounting guide.

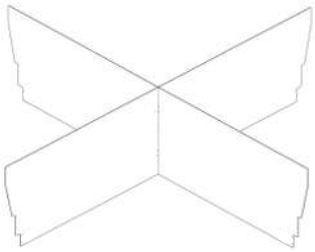

434030 DA 600 environment module

The environment module concentrates the air from the fan to increase the air jet range over the roof.

434481 DA 600 duct 500 mm gray

434482 DA 600 duct 500 mm black

Duct without fan suspension.

Comes with screws.

434031 DA 600 supporting ring

Used in special situations, e.g. to embed underfloor exhaustion and to stabilize DA 600 ducts.

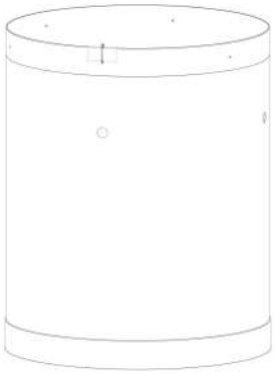

434080 DA 600 duct, out ø710x1000 gray

434280 DA 600 duct, out ø710x1000 black

Used as an external duct around the DA 600 duct in connection with extension of the duct above the roof.

Supplied with a mounting set.

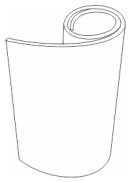

434455 DA 600 insulation 1000 mm

20 mm insulation with aluminum foil/vapour barrier.

Supplied with tape.

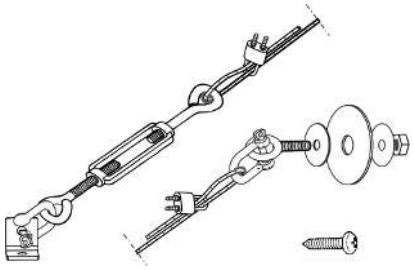

434449 DA 600/DA 820 storm protection kit

To be used if the chimney is extended by more than 1.5 m above the roof.

The storm protection kit stabilizes the chimney with steel wires between the roof duct and the roof.

Supplied with 24 m ø4 wire.

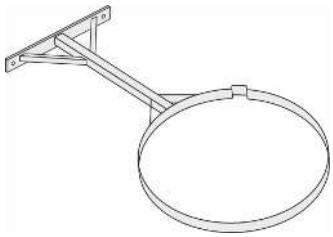

434085 DA 600 fitting for outside duct

Used to attach the outside chimney to the wall. Use two fittings for every 3 meters of duct.

Measurement between wall and duct: Min. 557 mm and max. 1087 mm.

Add 329 mm (radius of duct holder) to the measurement to the center of the duct.

Supplied with screws.

434089 DA 600 wire set, outside exhaust unit

Is used together with brackets for outside exhaust unit when two or more brackets are required.

2.1.2 Lead-through

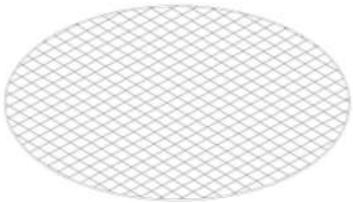

434092 DA 600 net, roof duct

The protective net is used for wall exhaustion or where extra protection is required.

Supplied with cable ties.

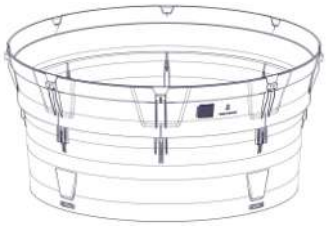

434431 DA 600 roof duct gray

434432 DA 600 roof duct black

Used for roof ducts in roof, outlet cone assembly, and for wall exhaust units.

Supplied with screws and mounting guide.

433493 Roof cloth neoprene 1.9 x 1.7m

An inexpensive alternative to the roofing sheet side or flex flashing. Neoprene cloths can be used at the transition between the building's roofing sheets and side mounted exhaust units/roof inlets.

Supplied with joint sealer and screws.

1 per exhaust unit/roof inlet.

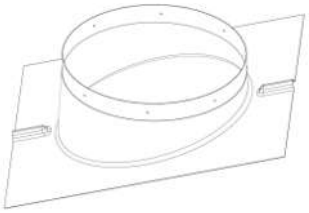

434040 DA 600 roofing sheet side gray

434240 DA 600 roofing sheet side black

The roofing sheet is used for mounting on the side and is available in different versions in terms of roofing sheet types and pitches.

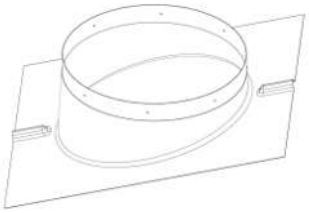

434041 DA 600 roofing sheet side long gray

434241 DA 600 roofing sheet side long black

It is a reinforced roofing sheet in weather-resistant fiberglass for side mounting, which is available in various versions concerning roofing sheet type and slope.

Always use it if a double duct construction is established using 434080/434280.

DA 600 roof duct outside (434008/434280) must be ordered separately.

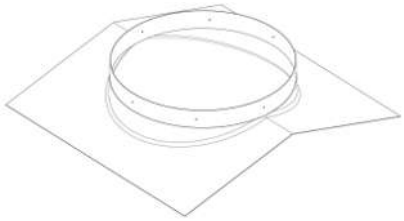

434045 DA 600 roofing sheet ridge gray

434245 DA 600 roofing sheet ridge black

The roofing sheet is used for mounting on the side and is available in different versions in terms of roofing sheet types and pitches.

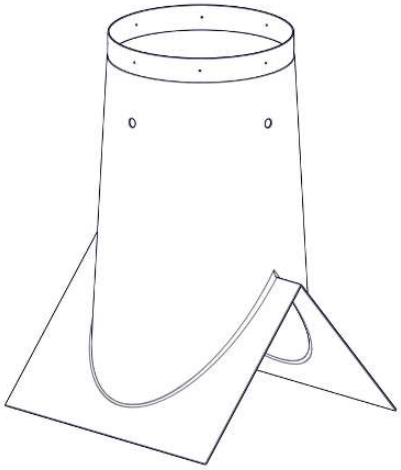

434044 DA 600 roofing sheet ridge long gray

434244 DA 600 roofing sheet ridge long black

It is a reinforced roofing sheet in weather-resistant fiberglass for ridge mounting, which is available in various versions concerning roofing sheet type and slope.

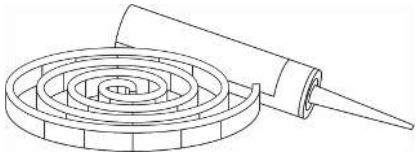

434093 DA 600/DA 820 kit for closure of water outlet

Used if water outlet is not required.

Includes Bostik rear stop 20 mm and Sikaflex AT Connection, gray, 600 ml.

2.1.3 Attic/section

434481 DA 600 duct 500 mm gray

434482 DA 600 duct 500 mm black

Duct without fan suspension.

Comes with screws.

434421 DA 600 duct for fan gray

434422 DA 600 duct for fan black

Duct with shoe for suspension of fan.

Supplied with fan suspension and screws.

434031 DA 600 supporting ring

Used in special situations, e.g. to embed underfloor exhaustion and to stabilize DA 600 ducts.

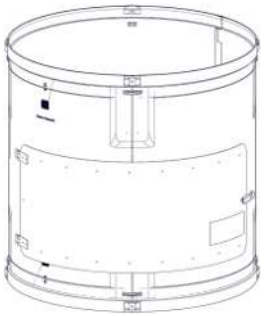

434021 DA 600 duct w/door, 500 mm gray

434221 DA 600 duct w/door, 500 mm black

Duct with door is used for servicing of fan.

Supplied with fan suspension and screws.

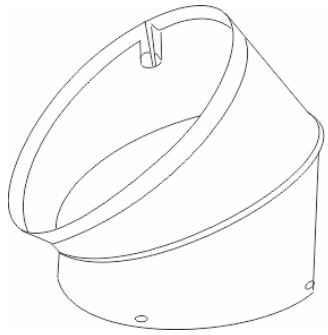

434461 DA 600 elbow 45º gray

434462 DA 600 elbow 45º black

The elbow can be used for adjustments in attics.

Supplied with screws.

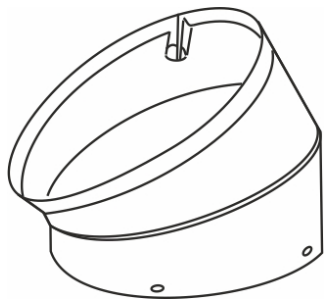

434024 DA 600 elbow 30º gray

The elbow can be used for adjustments in attics.

Supplied with screws.

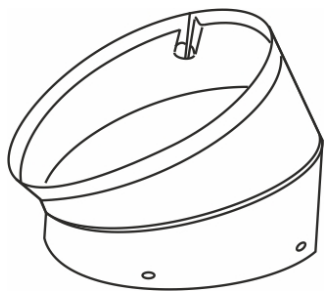

434022 DA 600 elbow 22.5º gray

The elbow can be used for adjustments in attics.

Supplied with screws.

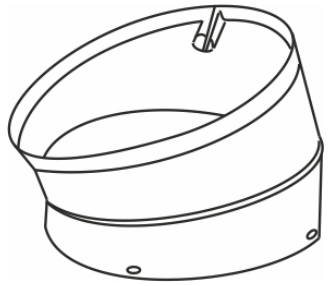

434023 DA 600 elbow 15º gray

The elbow can be used for adjustments in attics.

Supplied with screws.

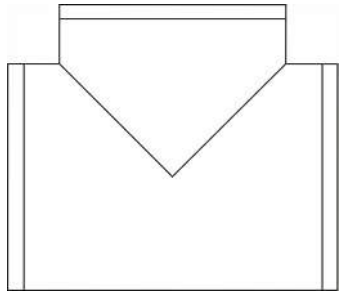

434409 DA 600 T-duct

Used for connecting ducts to one chimney.

Supplied with screws.

530149 Tape PVC 21 black 100 mm x 20 m

Tape is used to tighten DA 600 ducts which are not mounted vertical and are placed in a cold area and is without min. 50 mm insulation.

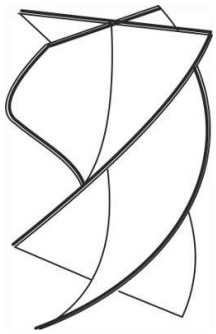

434263 DA 600 light trap 1000 mm

Used to reduce the light in DA 600 outlets.

The output will normally be reduced by approx. 15 %.

2.1.4 Inlet

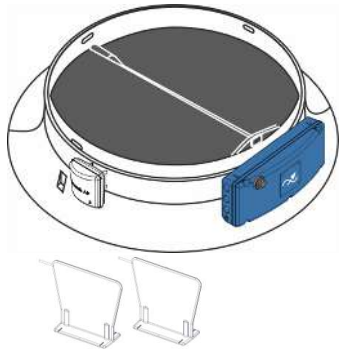

434016 DA 600 bell mouth/chimney stepless DynAir gray

Is used for stepless DA 600 exhaust units, where the maximum air volume is 5,000-16,000 m^3/h. The Dynamic Air sensor is supplied pre-assembled from SKOV A/S.

It comes with Dynamic Air sensor, bell mouth, swivel shutter, baffle plates, and a DA 74CV stepless swivel shutter motor.

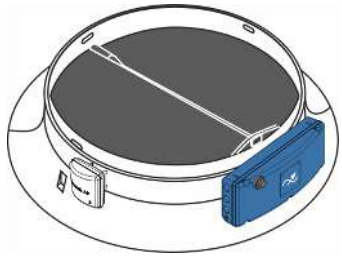

434034 DA 600 bell mouth/duct stepless DynAir gray

Used for stepless DA and 600 duct take-offs, where the maximum air volume is 3,500-10,000 m^3/h. The Dynamic Air sensor is supplied pre-assembled from SKOV A/S.

It comes with Dynamic Air sensor, bell mouth, swivel shutter, and a DA 74CV stepless swivel shutter motor.

There must always be at least half a meter of DA 600 duct connected to the unit to obtain a stable measurement.

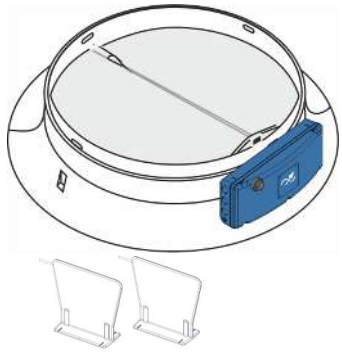

434007 DA 600 bell mouth stepless gray

434207 DA 600 bell mouth stepless black

Complete inlet unit with bell mouth, swivel shutter, baffle plates and a DA 74CV stepless winch motor.

Please note if a contactor is required, cf. item number 280060.

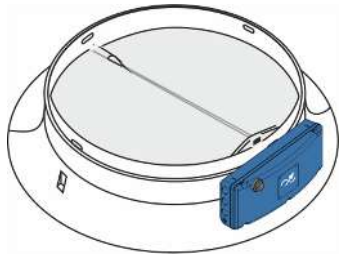

434006 DA 600 bell mouth ON/OFF gray

434206 DA 600 bell mouth ON/OFF black

Complete inlet unit with bell mouth, swivel shutter and a DA 74CO ON/OFF winch motor.

Please note if a contactor is required, cf. item number 280060.

434067 DA 600 bell mouth with flap, gray

434267 DA 600 bell mouth with flap, black

Used for chimney with mechanical drive.

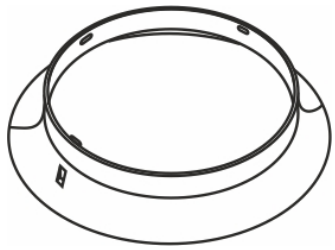

434471 DA 600 bell mouth gray

434472 DA 600 bell mouth black

A bell mouth is used where a swivel shutter is not required.

Supplied with screws.

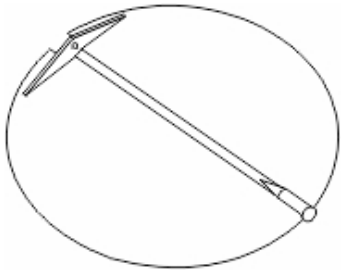

434212 DA 600 swivel shutter black

Used for mounting in duct.

Supplied with axle.

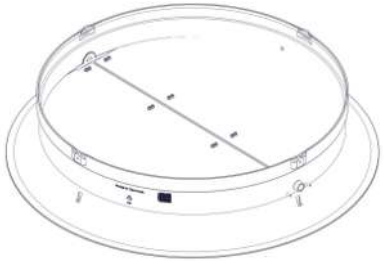

434012 DA 600 butterfly flap w/bell mouth

Use it until the ON/OFF exhaust unit opens through an air current.

The air output of the exhaust unit will be reduced.

Comes with screws.

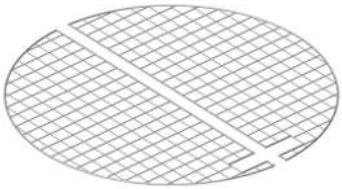

434091 DA 600 net, swivel shutter

The protective net is used if the fan is placed in a low position, e.g. less than 2.70 m above the floor and by wall exhaustion.

Supplied with cable ties.

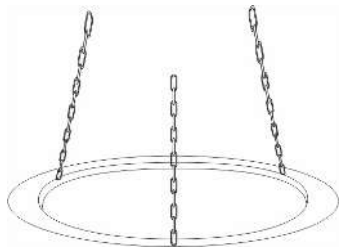

434060 DA 600 drip tray ø1100 mm gray

434260 DA 600 drip tray ø1100 mm black

The drip tray is used to prevent any encroaching water from dripping straight down into the livestock house.

The air output of the exhaust unit will be reduced.

The drip tray is suspended under the exhaust unit. A tiltable installation is an option, which facilitates cleaning and emptying.

Supplied with a mounting set.

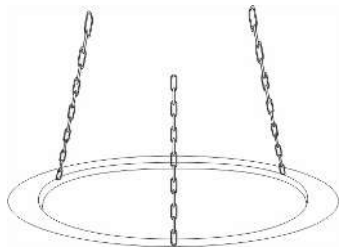

434261 DA 600 light plate ø1400 black

You use it for moderate protection from light ingress into the livestock house.

The air output of the exhaust unit will be reduced.

A tiltable installation is an option, which facilitates cleaning and emptying.

Supplied with a mounting set.

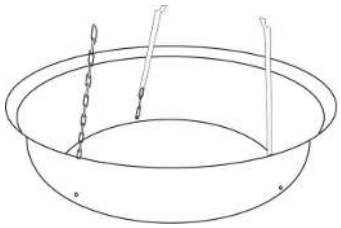

434262 DA 600 light bowl ø1350 black

You use it for a high degree of protection from light ingress into the live-stock house.

The air output of the exhaust unit will be reduced.

A tiltable installation is an option, which facilitates cleaning and emptying.

It comes with spacer rod and mounting set.

280060 Contactor tripolar 400V, 230V 50/60 Hz

The contactor kit is necessary when an ON/OFF fan unit is used together with DA 74.

Contactor AC3 12 A - 5.7 kW (400 V).

In other words, 1 contactor must be ordered for each DA 74 when the fan runs ON/OFF.

434018 Dynamic Air - kit for bell mouth/chimney

Dynamic Air sensor (0- 300 Pa) for measuring and regulation of air output for stepless chimneys. This item number is to be used only for retrofitting on existing chimneys.

Supplied with screw kit.

See specifications and limitations for item number 434016/434216 bell mouth/chimney stepless DynAir.

434035 Dynamic Air - kit for bell mouth/duct

Dynamic Air sensor (0- 100 Pa) for measuring and regulation of air output for stepless take-offs in central duct. This item number is to be used only for retrofitting on existing take-off.

Supplied with screw kit.

See specifications and limitations for item number 434034 bell mouth/duct stepless DynAir.

434008 DA 600/DA 820 air direction baffles, black

Used to improve the accuracy of the minimum ventilation.

The baffle plates are used together with stepless fans and include two air baffle plates and mounting screws.

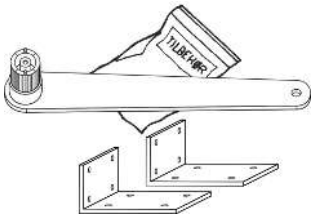

432056 Universal kit f. plastic swivel shutter

Used when the swivel shutter is placed in a duct and not in the bell mouth.

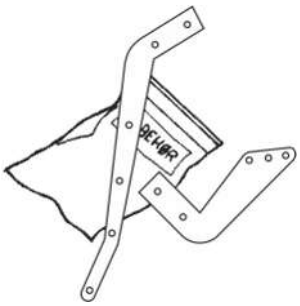

434088 Arm for swivel shutter in bell mouth

Includes a short and a long arm for the swivel shutter, suspension plate and various mounting screws.

2.1.5 Central exhaust

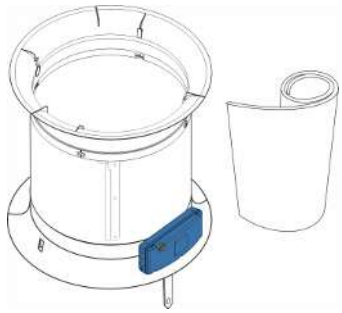

434050 DA 600 take-off w. DA 74, gray

Is typically used to connect a house section and a central duct.

Supplied with 2 bell mouths, 0.5 m duct, insulation, swivel shutter, arm for swivel shutter and a DA 74CV winch motor.

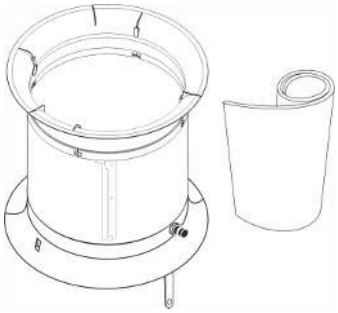

434051 DA 600 take-off, gray

Is typically used to connect a house section and a central duct.

Supplied with 2 bell mouths, 0.5 m duct, insulation, swivel shutter, arm for swivel shutter for connection to a decentralized winch motor.

2.1.6 Under-floor exhaustion

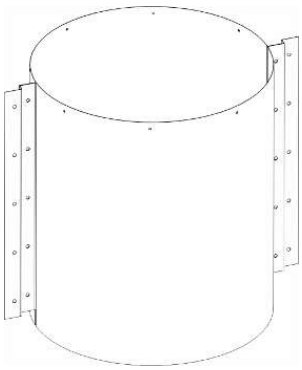

434266 DA 600 duct for underfloor exhaust 750 mm ss

The duct consists of 2 similar, stainless half ducts which are assembled with screws to make the duct air proof. The duct has fittings on the sides so that it can be fitted to house equipment. The height of the stainless duct is 750 mm and is extended via a DA 600 duct.

Supplied with mounting set with screws for assembly of half ducts. The mounting set does not include screws for fitting on the equipment or for extension via DA 600 duct.

434031 DA 600 supporting ring

Used in special situations, e.g. to embed underfloor exhaustion and to stabilize DA 600 ducts.

2.2 Outline of wall exhaustion

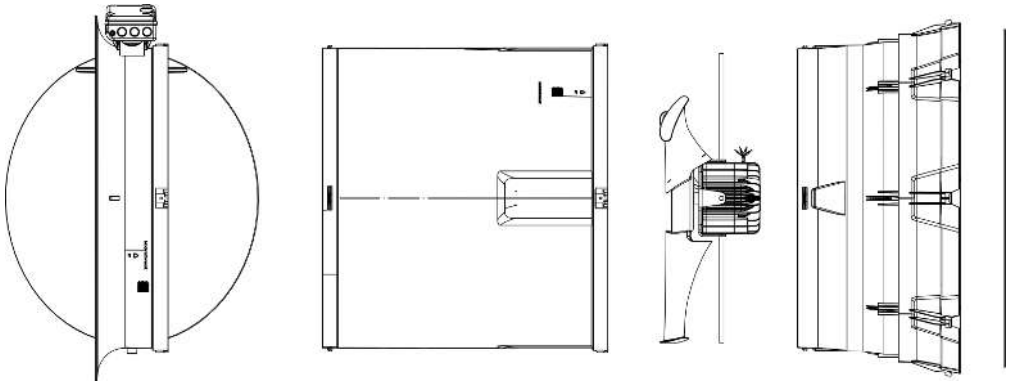

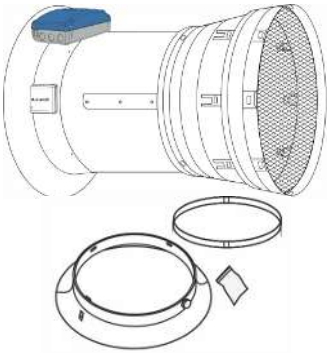

434019 DA 600 wall exhaustion stepless DynAir

Used for stepless DA 600 wall exhaustion with Dynamic Air. The Dynamic Air sensor is supplied pre-assembled from SKOV A/S.

Includes a DA 600 stepless DynAir (434016), 0.5 m duct, roof duct, fan suspension, net and mounting kit for DA 600 wall exhaustion.

See specifications and limitations for item number 434016/434216 DA 600 bell mouth/chimney stepless DynAir.

Please note if a contactor is required, cf. item number. 280060.

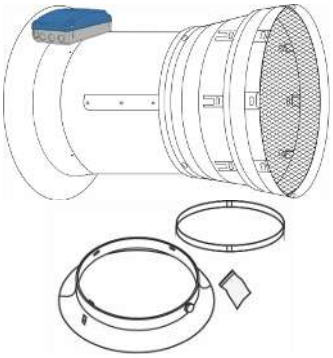

434052 DA 600 wall exhaust stepless

Used for stepless wall exhaust units.

Includes a DA 600 stepless (434007), 0.5 m duct, roof duct, fan suspension, net and mounting kit for DA 600 wall exhaustion.

Please note if a contactor is required, cf. item number. 280060.

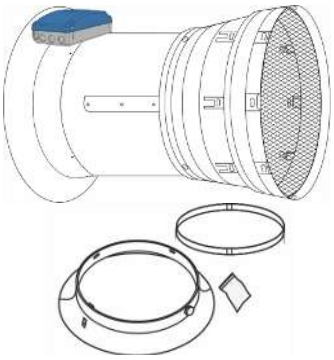

434053 DA 600 wall exhaust ON/OFF

Used for ON/OFF wall exhaust units.

Includes a DA 600 bell mouth ON/OFF (434006), 0.5 m duct, roof duct, fan suspension, net and mounting kit for DA 600 wall exhaustion.

Please note if a contactor is required, cf. item number. 280060.

280060 Contactor tripolar 400V, 230V 50/60 Hz

The contactor kit is necessary when an ON/OFF fan unit is used together with DA 74.

Contactor AC3 12 A - 5.7 kW (400 V).

In other words, 1 contactor must be ordered for each DA 74 when the fan runs ON/OFF.

3 Technical data

Mechanical		
Material	%	PP T20
Color		Black, gray
Environment		
Temperature, operation	°C	-30 to +70
Temperature, storage	°C	-40 to +65 – and protected against direct sunlight.
Ambient humidity, operation	% RH	0-95% RH
Shipment		
Bell mouth, dimensions HxWxD	mm	202x840x840
Duct with fan suspension, dimensions HxWxD	mm	500x657x657
Duct 500 mm, dimensions HxWxD	mm	500x657x657
Roof duct, dimensions HxBxD	mm	451x800x800
Outlet cone, dimensions HxWxD	mm	572x1020x1020
Bell mouth, weight	g	6864
Roof duct, weight	g	4240
Outlet cone, weight	g	7000
Duct 500 mm, weight	g	4400

3.1 Dimensioned sketch

Dimensions in mm.

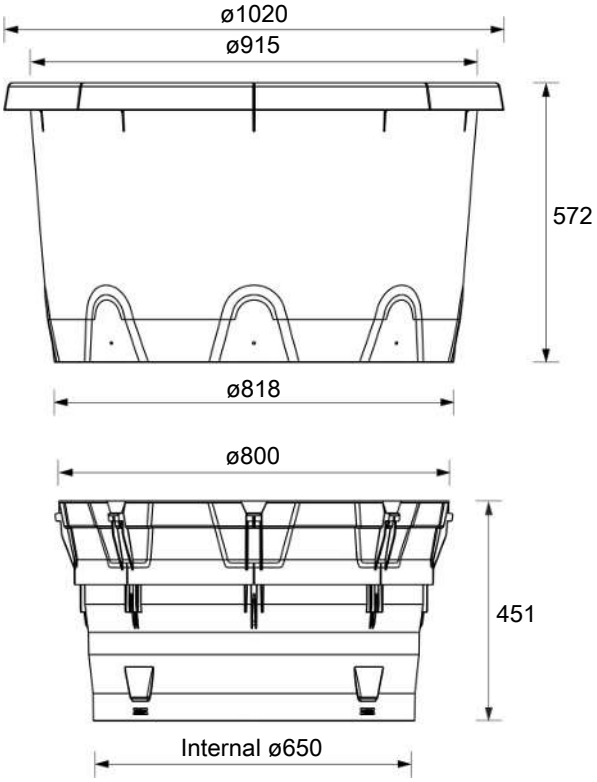

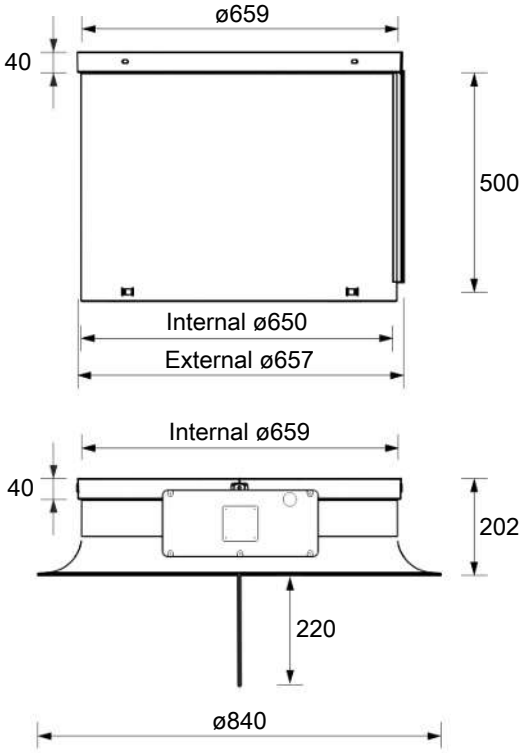

TI • 2025-09-04 • en-US • Made in Denmark

SKOV A/S • Hedelund 4 • Glyngøre • DK-7870 Roslev
Tel. +45 72 17 55 55 • www.skov.com • E-mail: skov@skov.dk